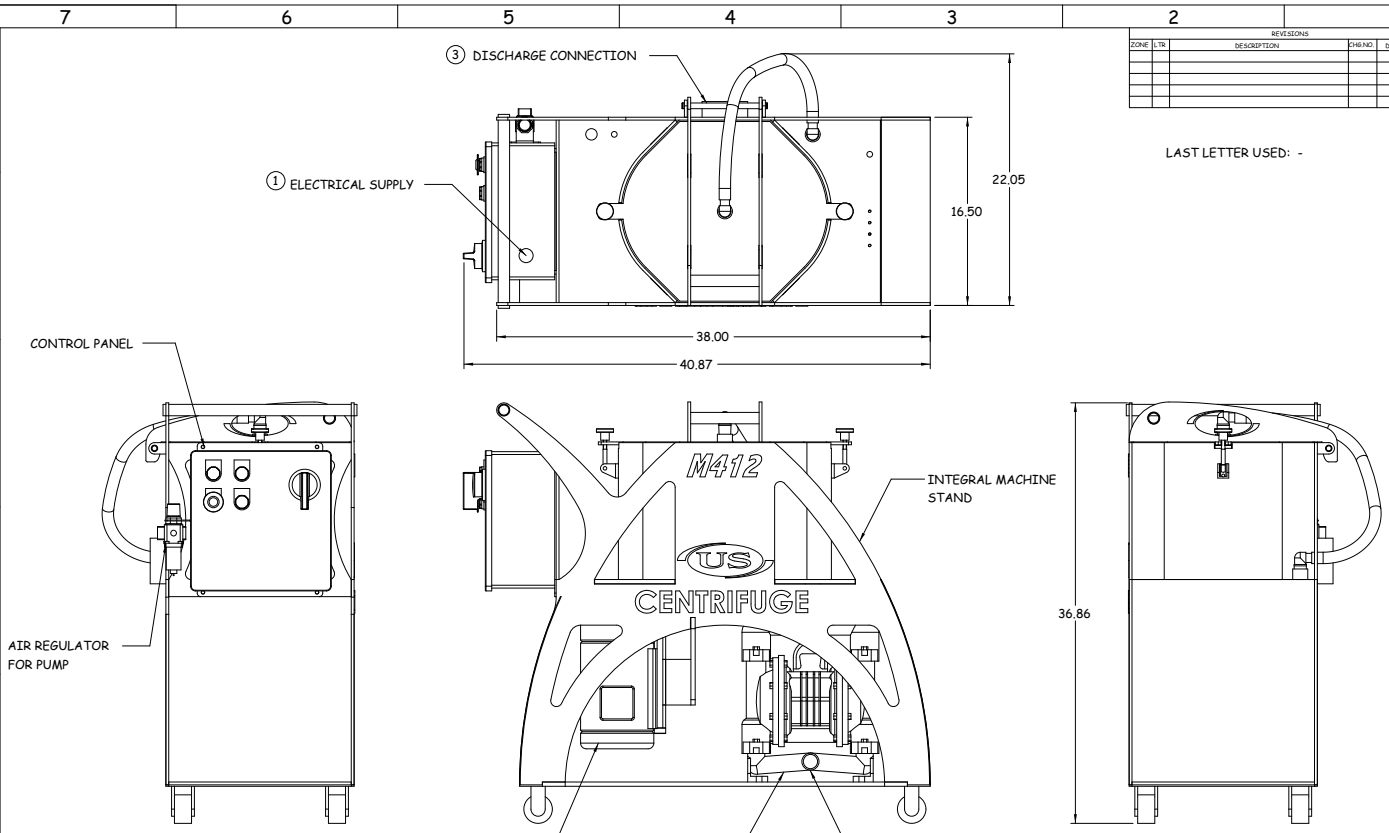

REVISIONS					
ZONE	LTR	DESCRIPTION	CHG NO.	DATE	APPROVED

LAST LETTER USED: -

COMPANY CONFIDENTIAL

THIS DRAWING IS THE PROPERTY OF US CENTRIFUGE AND IT MUST BE ACCOUNTED FOR AND RETURNED UPON DEMAND. INFORMATION HEREIN IS COMPANY CONFIDENTIAL AND MUST NOT BE COPIED, REPRODUCED, DUPLICATED, DISCLOSED TO OTHERS IN WHOLE OR IN PART, OR SENT OUTSIDE THE COMPANY WITHOUT WRITTEN AUTHORIZATION.

NOTES:
1) MACHINE STAND IS INTEGRAL
2) PUMP IS OPTIONAL.

UNLESS OTHERWISE SPECIFIED DIMENSIONS ARE IN INCHES TOLERANCE ON 2 PLACE ±.01 3 PLACE ±.005 ANGLE ± 0.30° THIRD ANGLE PROJECTION	US CENTRIFUGE	DWG NO. L10248		
	DRAFTER J. BERGER	DATE 2/20/04	TITLE M412 CENTRIFUGE	
	CHK J. BERGER	DATE		
M412	ENGR J. BERGER	DATE	SIZE D	REF. M412.ASM
NEXT ASSY / MODEL	MATERIAL -			
APPLICATION	FINAL S. BEHRENS	DATE	SCALE 12.5/1	SHEET 1/1